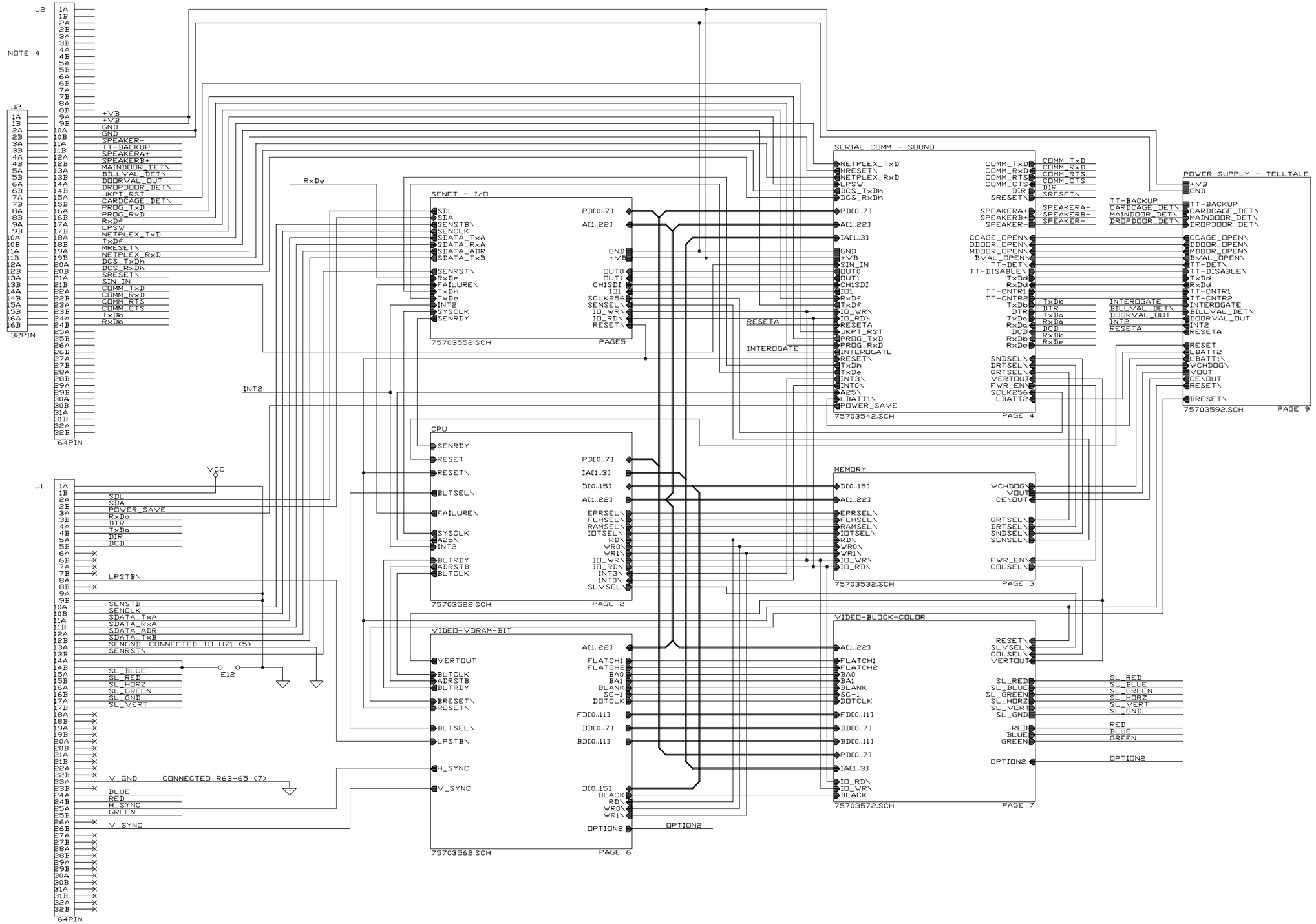
J2
NOTE 4
64PIN
J2
32PIN
+VB
GND
SPEAKER-
TT-BACKUP
SPEAKERA+
SPEAKERB+
MAINDOOR_DET\
BILLVAL_DET\
DOORVAL_OUT
DROPDOOR_DET\
JKPT_RST
CARDCAGE_DET\
PROG_TxD
PROG_RxD
RxDf
LPSW
NETPLEX_TxD
TxDf
MRESET\
NETPLEX_RxD
DCS_TxDh
DCS_RxDh
SRESET\
SIN_IN
COMM_TxD
COMM_RxD
COMM_RTS
COMM_CTS
TxDb
RxDb
RxDe
INT2
SENET - I/O
SDL
SDA
SENSTB\
SENCLK
SDATA_TxA
SDATA_RxA
SDATA_ADR
SDATA_TxB
SENRST\
RxDe
FAILURE\
TxDh
TxDe
INT2
SYSCLK
SENRDY
PD[0..7]
A[1..22]
GND
+VB
OUT0
OUT1
CH1SDI
ID1
SCLK256
SENSEL\
IO_WR\
IO_RD\
RESET\
75703552.SCH
PAGE5
SERIAL COMM - SOUND
NETPLEX_TxD
MRESET\
NETPLEX_RxD
LPSW
DCS_TxDh
DCS_RxDh
PD[0..7]
A[1..22]
IA[1..3]
GND
+VB
SIN_IN
OUT0
OUT1
CH1SDI
ID1
RxDf
TxDf
IO_WR\
IO_RD\
RESETA
JKPT_RST
PROG_TxD
PROG_RxD
INTEROGATE
RESET\
TxDh
TxDe
INT3\
INT0\
A25\
LBATT1\
POWER_SAVE
75703542.SCH
PAGE 4
COMM_TxD
COMM_RxD
COMM_RTS
COMM_CTS
DIR
SRESET\
SPEAKERA+
SPEAKERB+
SPEAKER-
CCAGE_OPEN\
DDOOR_OPEN\
MDOOR_OPEN\
BVAL_OPEN\
TT-DET\
TT-DISABLE\
TxDd
RxDd
TT-CNTR1
TT-CNTR2
TxDb
DTR
TxDa
RxDa
DCD
RxDb
RxDe
SNDSEL\
DRTSEL\
QRTSEL\
VERTOUT
FWR_EN\
SCLK256
LBATT2
POWER SUPPLY - TELLTALE
+VB
GND
TT-BACKUP
CARDCAGE_DET\
MAINDOOR_DET\
DROPDOOR_DET\
CCAGE_OPEN\
DDOOR_OPEN\
MDOOR_OPEN\
BVAL_OPEN\
TT-DET\
TT-DISABLE\
TxDd
RxDd
TT-CNTR1
TT-CNTR2
INTEROGATE
BILLVAL_DET\
DOORVAL_OUT
INT2
RESETA
RESET
LBATT2
LBATT1\
WCHDOG\
VOUT
CE\OUT
RESET\
BRESET\
75703592.SCH
PAGE 9
CPU
SENRDY
RESET
RESET\
BLTSEL\
FAILURE\
SYSCLK
A25\
INT2
BLTRDY
ADRSTB
BLTCLK
PD[0..7]
IA[1..3]
D[0..15]
A[1..22]
EPRSEL\
FLHSEL\
RAMSEL\
IOTSEL\
RD\
WR0\
WR1\
IO_WR\
IO_RD\
INT3\
INT0\
SLVSEL\
75703522.SCH
PAGE 2
MEMORY
D[0..15]
A[1..22]
EPRSEL\
FLHSEL\
RAMSEL\
IOTSEL\
RD\
WR0\
WR1\
IO_WR\
IO_RD\
WCHDOG\
VOUT
CE\OUT
QRTSEL\
DRTSEL\
SNDSEL\
SENSEL\
FWR_EN\
COLSEL\
75703532.SCH
PAGE 3
VCC
J1
64PIN
SDL
SDA
POWER_SAVE
RxDa
DTR
TxDa
DIR
DCD
LPSTB\
SENSTB
SENCLK
SDATA_TxA
SDATA_RxA
SDATA_ADR
SDATA_TxB
SENGND CONNECTED TO U71 (5)
SENRST\
E12
SL_BLUE
SL_RED
SL_HORZ
SL_GREEN
SL_GND
SL_VERT
V_GND CONNECTED R63-65 (7)
BLUE
RED
H_SYNC
GREEN
V_SYNC
VIDEO-VDRAM-BIT
VERTOUT
BLTCLK
ADRSTB
BLTRDY
BRESET\
RESET\
BLTSEL\
LPSTB\
H_SYNC
V_SYNC
A[1..22]
FLATCH1
FLATCH2
BA0
BA1
BLANK
SC-1
DOTCLK
FD[0..11]
DD[0..7]
BD[0..11]
D[0..15]
BLACK
RD\
WR0\
WR1\
OPTION2
OPTION2
75703562.SCH
PAGE 6
VIDEO-BLOCK-COLOR
A[1..22]
FLATCH1
FLATCH2
BA0
BA1
BLANK
SC-1
DOTCLK
FD[0..11]
DD[0..7]
BD[0..11]
PD[0..7]
IA[1..3]
IO_RD\
IO_WR\
BLACK
RESET\
SLVSEL\
COLSEL\
VERTOUT
SL_RED
SL_BLUE
SL_GREEN
SL_HORZ
SL_VERT
SL_GND
RED
BLUE
GREEN
OPTION2
75703572.SCH
PAGE 7

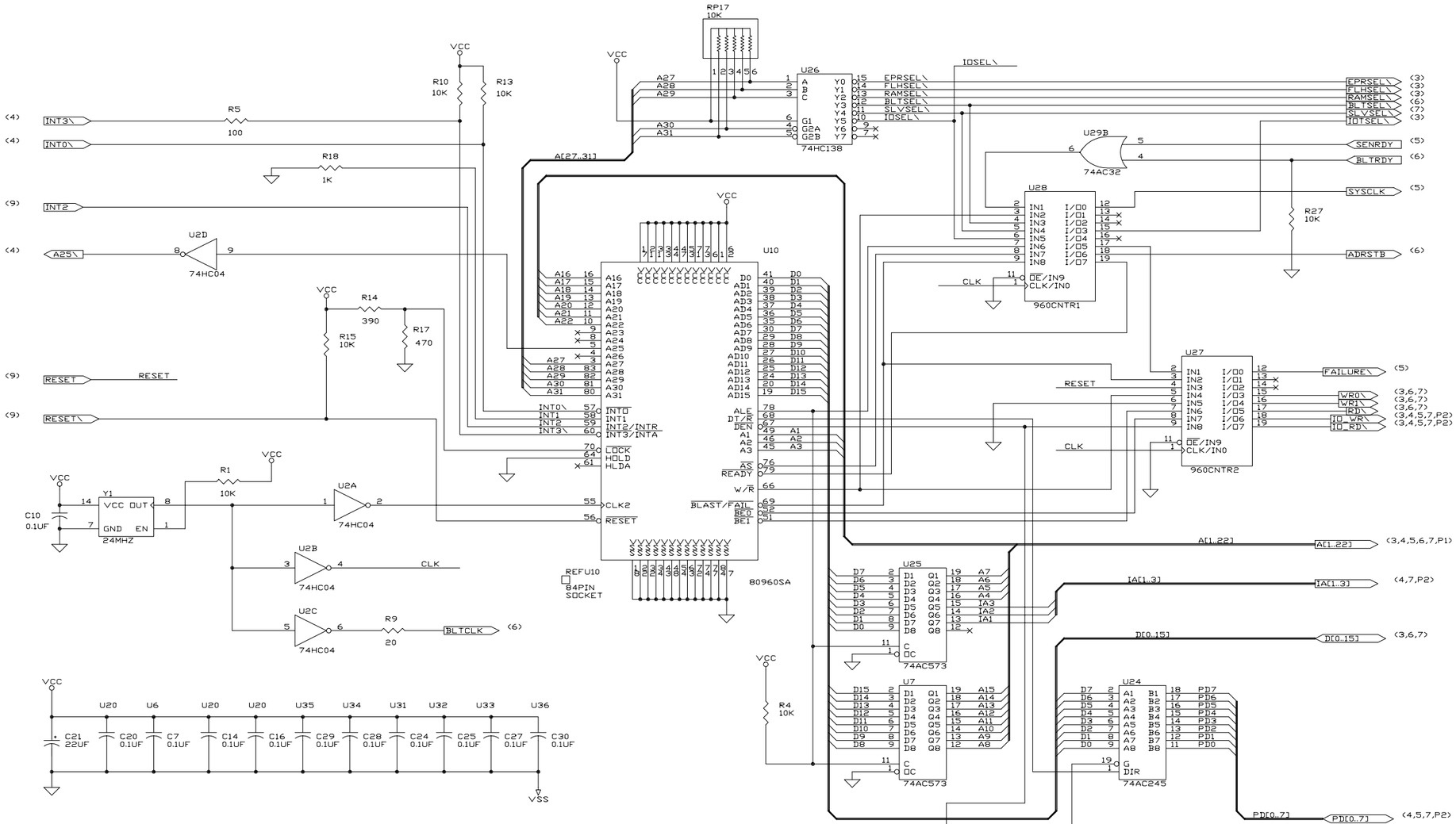

OPTION JUMPER		EPROM	FLASH
E1	EPROM	2-3(A20)	1-2(A19)
E2		2-3(A20)	1-2(A19)
E6,E7		1-2(A19)	2-3(WE\)
E8,E9		1-2(A19)	2-3(WE\)

		RTC	CMOS RAM
E3	CONNECT FOLLOWING PINS	1-2	2-3

RAM	1M	4M
E14	JUMPERED	OPEN
E16	JUMPERED	OPEN
E15	OPEN	JUMPERED
E17	OPEN	JUMPERED

SPECIAL	
E10	CARD-CAGE RESET
E11	MAIN-DOOR RESET
E12	NOT FIELD SELECTABLE

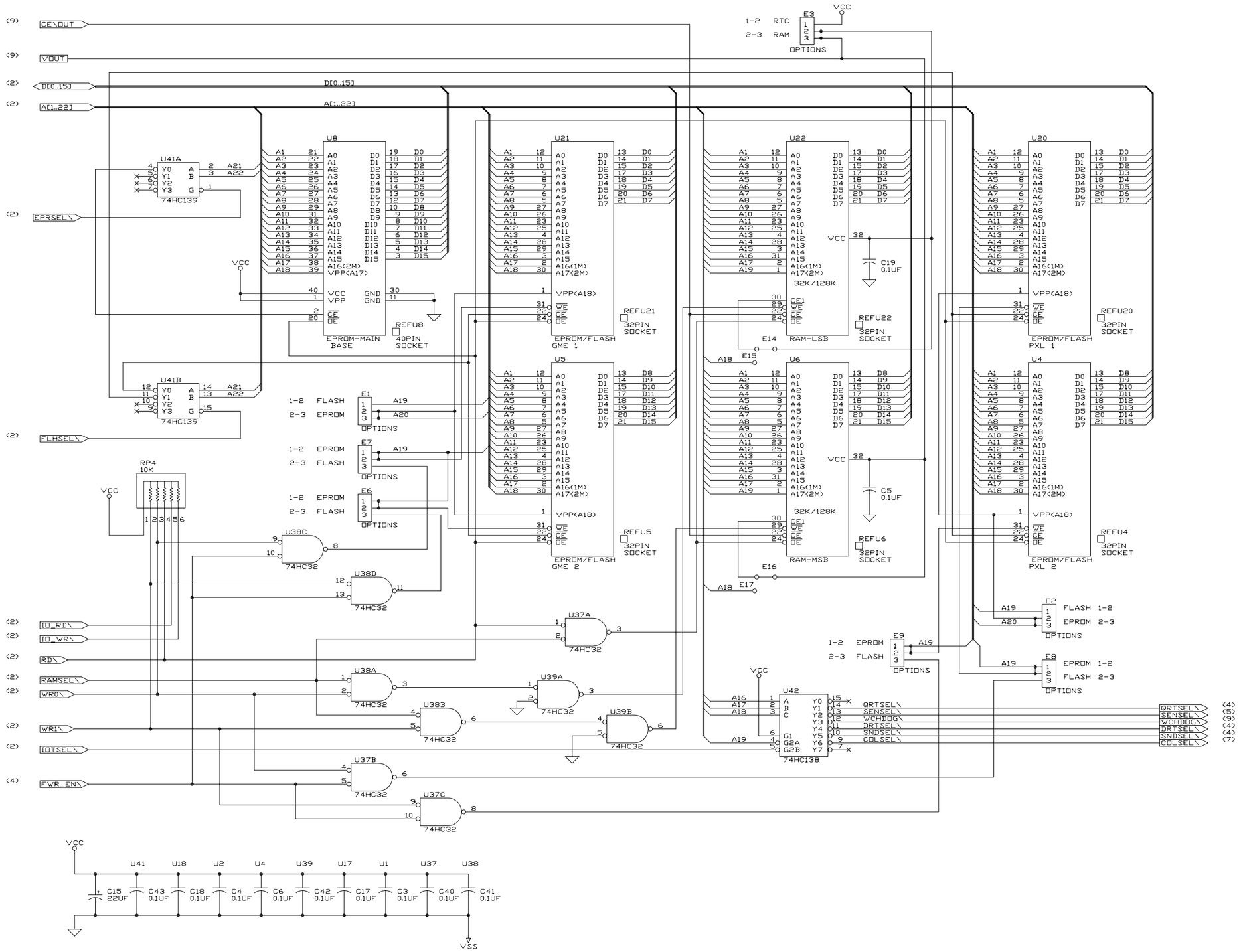
CE\OUT
VOUT
D[0..15]
A[1..22]
EPRSEL\
FLHSEL\
IO_RD\
IO_WR\
RD\
RAMSEL\
WR0\
WR1\
IOTSEL\
FWR_EN\
U41A
U41B
74HC139
U8
EPROM-MAIN BASE
REFU8
40PIN SOCKET
U21
EPROM/FLASH GME 1
REFU21
32PIN SOCKET
U5
EPROM/FLASH GME 2
REFU5
U22
RAM-LSB
REFU22
U6
RAM-MSB
REFU6
U20
EPROM/FLASH PXL 1
REFU20
U4
EPROM/FLASH PXL 2
REFU4
32K/128K
C19 0.1UF
C5 0.1UF
E3
RTC
RAM
OPTIONS
E1
E7
E6
E9
E2
E8
FLASH
EPROM
RP4 10K
U38C
U38D
U37A
U38A
U39A
U38B
U39B
U37B
U37C
74HC32
U42
74HC138
QRTSEL\
SENSEL\
WCHDOG\
DRTSEL\
SNDSEL\
CDLSEL\
VCC
VSS
C15 22UF
C43 0.1UF
C18 0.1UF
C4 0.1UF
C6 0.1UF
C42 0.1UF
C17 0.1UF
C3 0.1UF
C40 0.1UF
C41 0.1UF

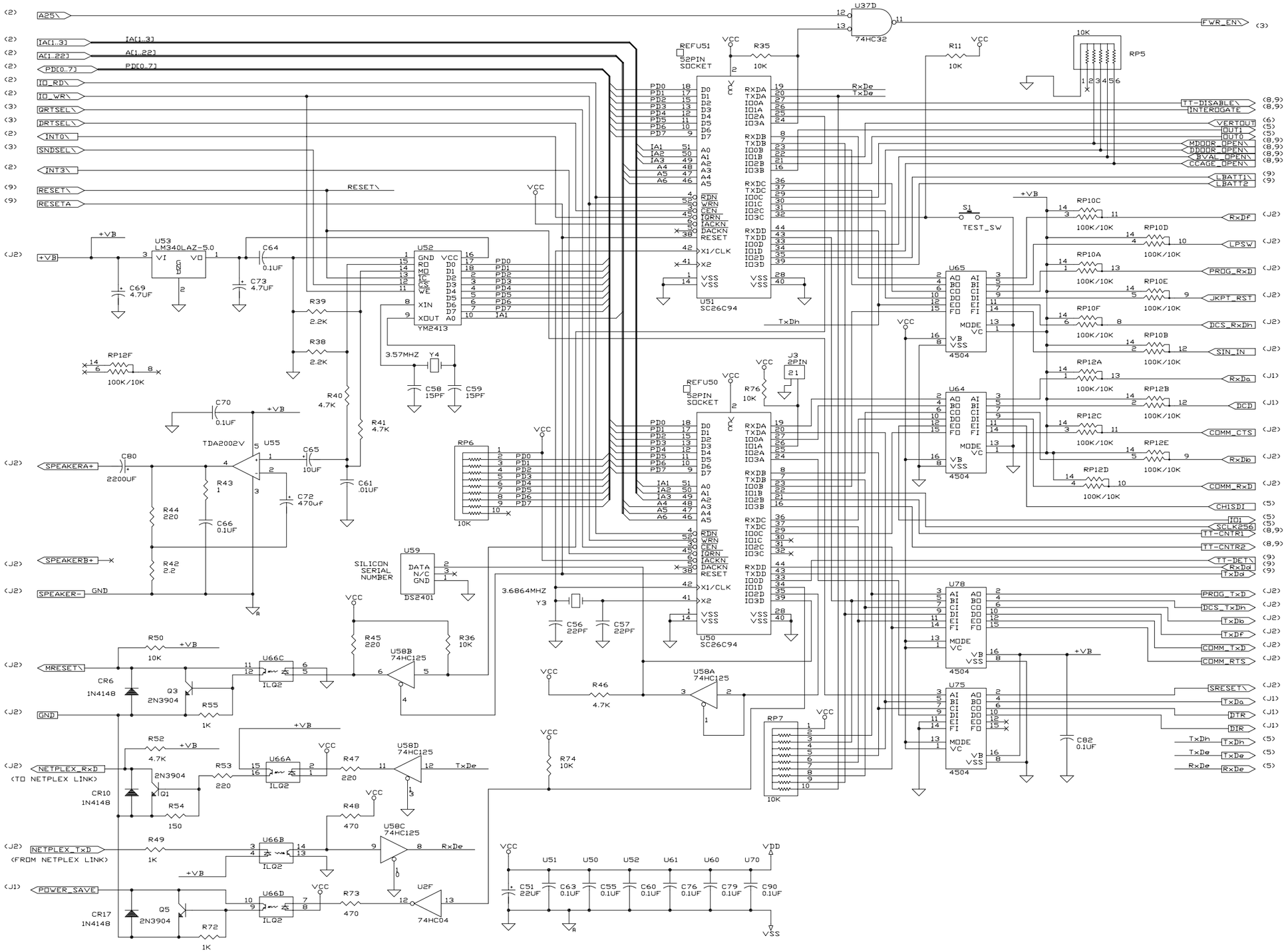
A25\
IA[1..3]
A[1..22]
PD[0..7]
IO_RD\
IO_WR\
QRTSEL\
DRTSEL\
INT0\
SNDSEL\
INT3\
RESET\
RESETA
+VB
U53
LM340LAZ-5.0
C64
0.1UF
C69
4.7UF
C73
4.7UF
U52
YM2413
R39
2.2K
R38
2.2K
3.57MHZ
Y4
C58
15PF
C59
15PF
RP12F
100K/10K
C70
0.1UF
TDA2002V
U55
C65
10UF
C80
2200UF
SPEAKERA+
R43
1
C72
470uf
C61
.01UF
R44
220
C66
0.1UF
SPEAKERB+
R42
2.2
SPEAKER-
GND
R40
4.7K
R41
4.7K
RP6
10K
U59
SILICON
SERIAL
NUMBER
DS2401
REFU51
52PIN
SOCKET
U51
SC26C94
REFU50
U50
SC26C94
R35
10K
R76
10K
J3
2PIN
3.6864MHZ
Y3
C56
22PF
C57
22PF
U37D
74HC32
R11
10K
RP5
10K
S1
TEST_SW
U65
U64
U78
U75
4504
RxDe
TxDe
TxDh
TT-DISABLE\
INTEROGATE
VERTOUT
OUT1
OUT0
MDOOR_OPEN\
DDOOR_OPEN\
BVAL_OPEN\
CCAGE_OPEN\
LBATT1\
LBATT2
RxDf
LPSW
PROG_RxD
JKPT_RST
DCS_RxDh
SIN_IN
RxDa
DCD
COMM_CTS
RxDb
COMM_RxD
CHISDI
IO1
SCLK256
TT-CNTR1
TT-CNTR2
TT-DET\
TxDd
PROG_TxD
DCS_TxDh
TxDb
TxDf
COMM_TxD
COMM_RTS
SRESET\
TxDa
DTR
DIR
MRESET\
R50
10K
CR6
1N4148
Q3
2N3904
R55
1K
U66C
ILQ2
R45
220
U58B
74HC125
R36
10K
R46
4.7K
U58A
74HC125
R74
10K
RP7
10K
C82
0.1UF
NETPLEX_RxD
(TO NETPLEX LINK)
R52
4.7K
2N3904
Q1
CR10
1N4148
R53
220
U66A
R47
220
U58D
74HC125
R54
150
R48
470
U58C
74HC125
NETPLEX_TxD
(FROM NETPLEX LINK)
R49
1K
U66B
POWER_SAVE
CR17
1N4148
Q5
2N3904
R72
1K
U66D
R73
470
U2F
74HC04
VDD
VSS
C51
22UF
C63
0.1UF
C55
0.1UF
C60
0.1UF
C76
0.1UF
C79
0.1UF
C90
0.1UF

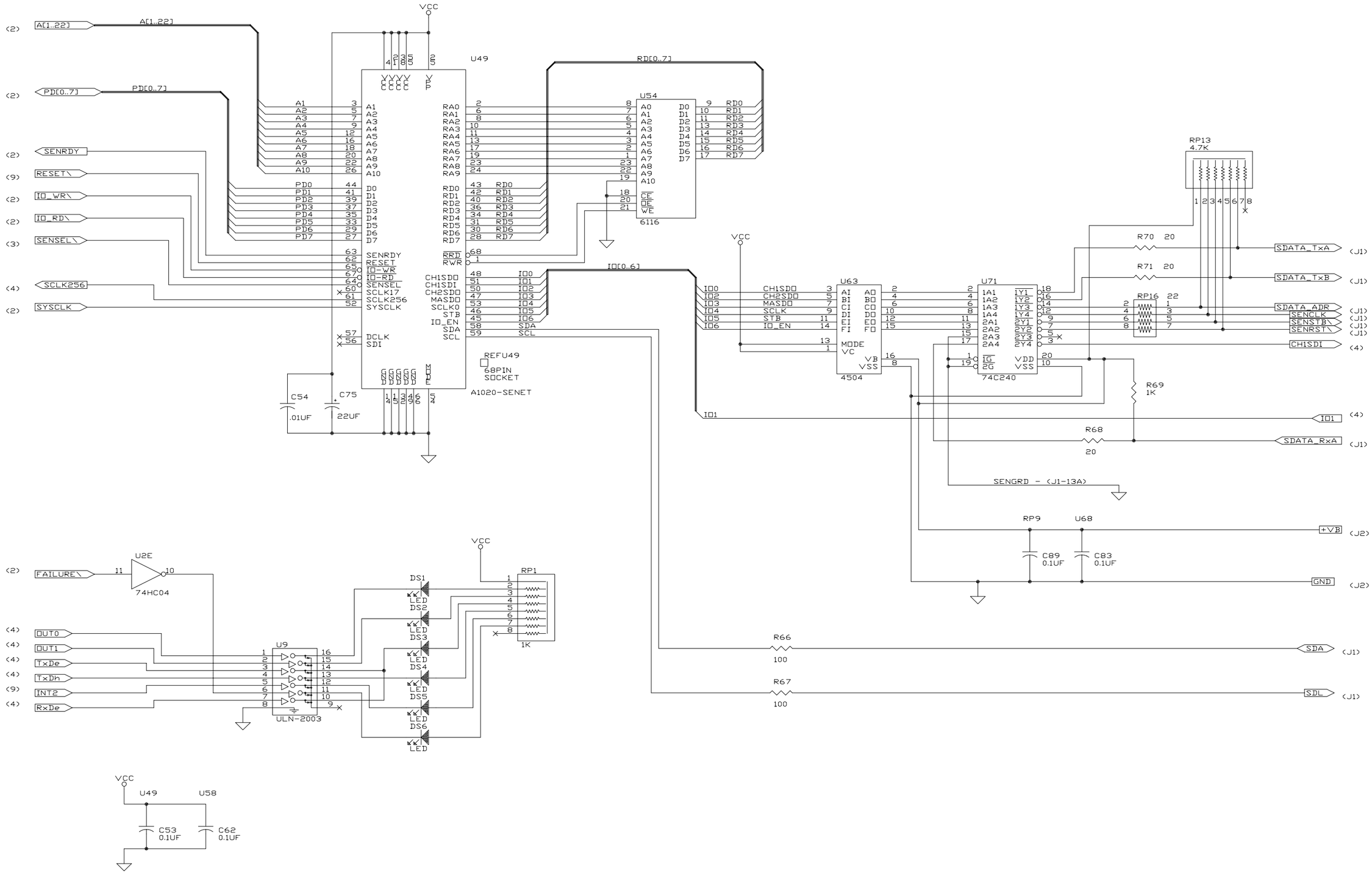
U49
A1020-SENET
REFU49
68PIN SOCKET
U54
6116
U63
4504
U71
74C240
RP13
4.7K
RP16
RP9
U68
U2E
74HC04
U9
ULN-2003
RP1
1K
DS1
DS2
DS3
DS4
DS5
DS6
LED
U49
U58
C53
0.1UF
C62
0.1UF
C54
.01UF
C75
22UF
C89
0.1UF
C83
0.1UF
R70 20
R71 20
R69
1K
R68
20
R66
100
R67
100
SENGRD - (J1-13A)
SDATA_TxA
SDATA_TxB
SDATA_ADR
SENCLK
SENSTB\
SENRST\
CH1SDI
ID1
SDATA_RxA
+VB
GND
SDA
SDL
A[1..22]
PD[0..7]
SENRDY
RESET\
IO_WR\
IO_RD\
SENSEL\
SCLK256
SYSCLK
FAILURE\
OUT0
OUT1
TxDe
TxDh
INT2
RxDe
RD[0..7]
IO[0..6]
VCC

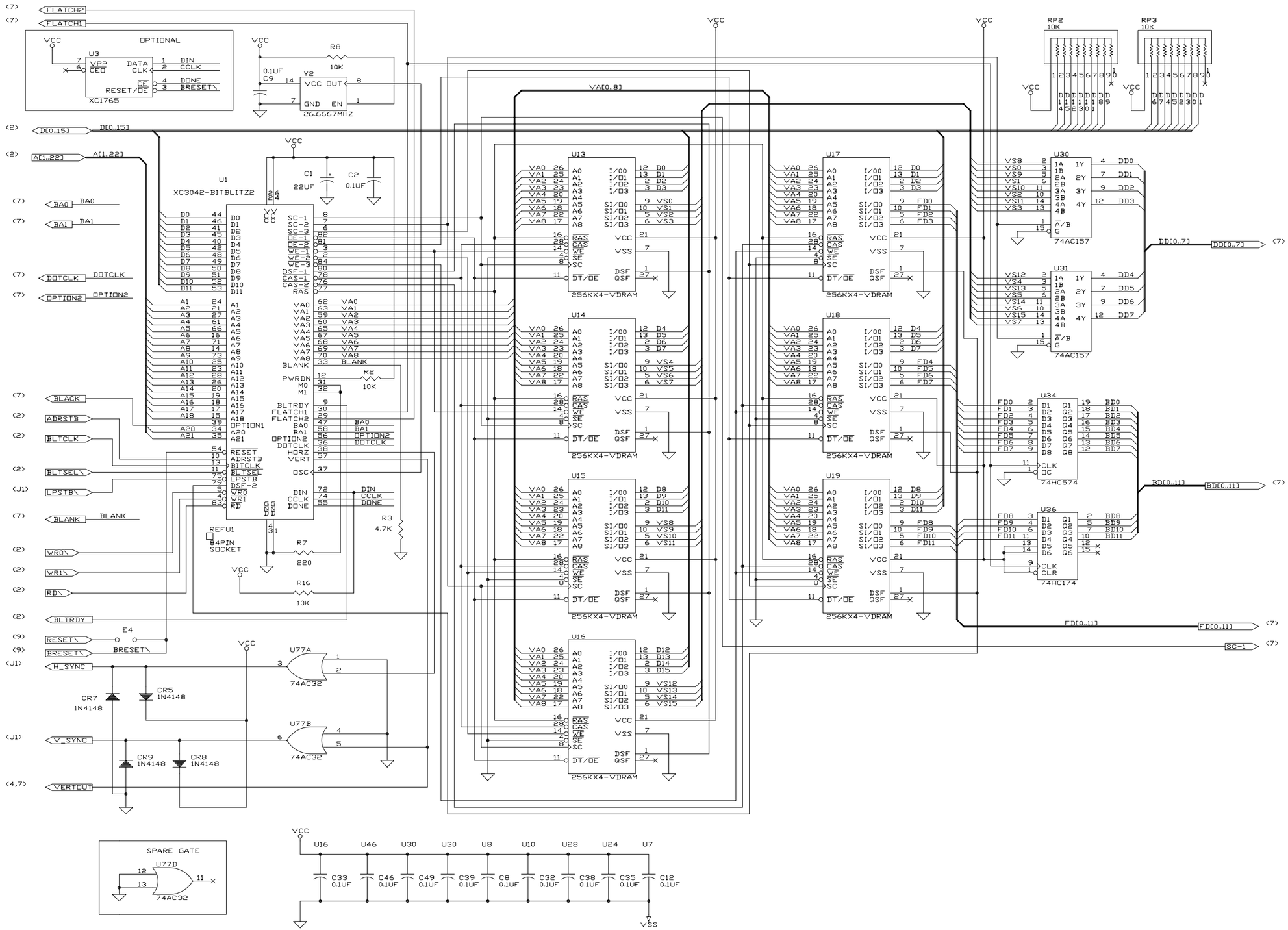
OPTIONAL
U3
XC1765
R8
10K
C9 0.1UF
Y2
26.6667MHZ
U1
XC3042-BITBLITZ2
C1 22UF
C2 0.1UF
R2 10K
R3 4.7K
R7 220
R16 10K
REFU1
84PIN SOCKET
U13
U14
U15
U16
U17
U18
U19
256KX4-VDRAM
RP2 10K
RP3 10K
U30
U31
74AC157
U34
74HC574
U36
74HC174
U77A
U77B
74AC32
CR7 1N4148
CR5 1N4148
CR9 1N4148
CR8 1N4148
SPARE GATE
U77D
74AC32
C33 0.1UF
C46 0.1UF
C49 0.1UF
C39 0.1UF
C8 0.1UF
C32 0.1UF
C38 0.1UF
C35 0.1UF
C12 0.1UF
VCC
VSS

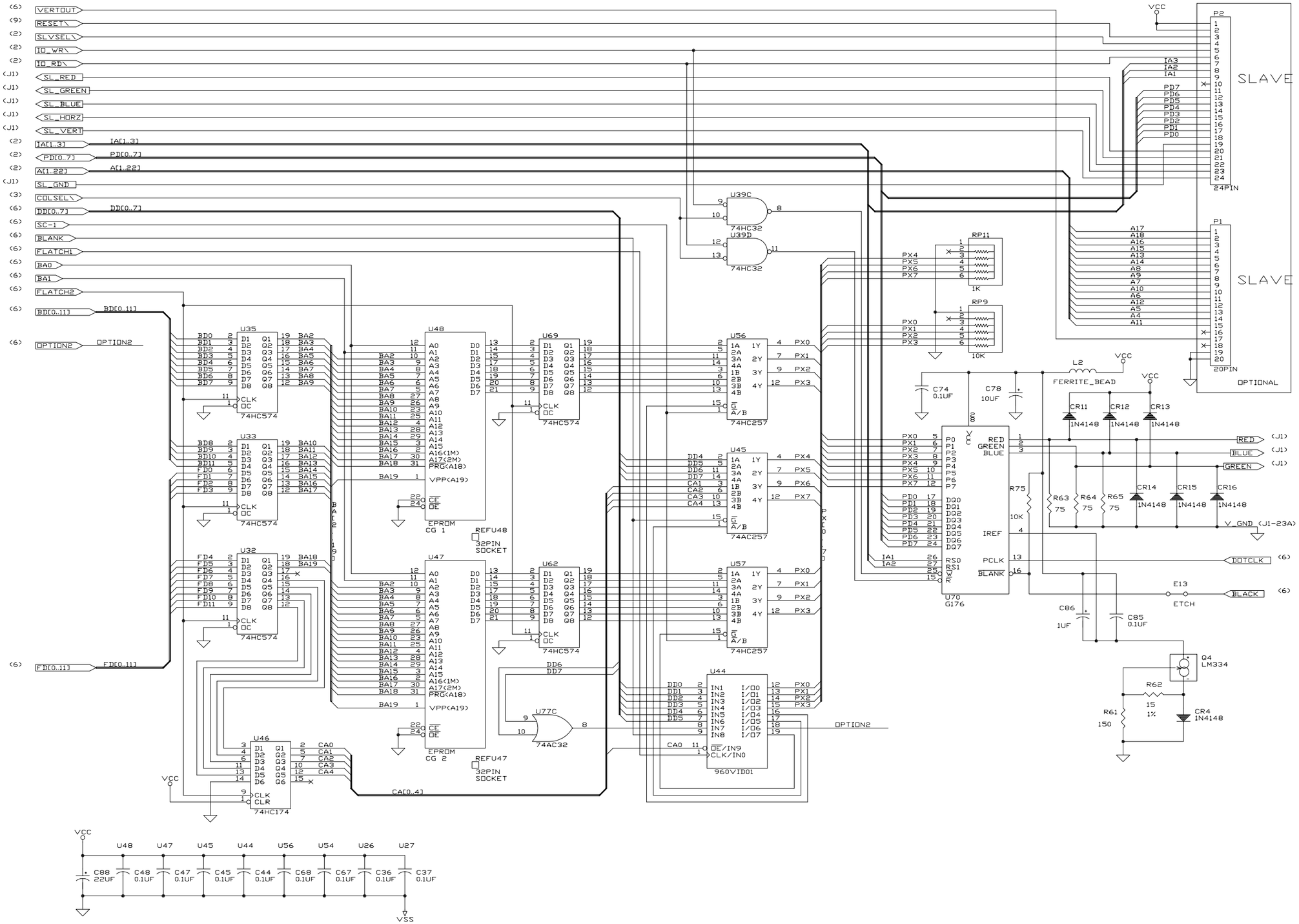
VERTOUT
RESET\
SLVSEL\
IO_WR\
IO_RD\
SL_RED
SL_GREEN
SL_BLUE
SL_HORZ
SL_VERT
IA[1..3]
PD[0..7]
A[1..22]
SL_GND
COLSEL\
DD[0..7]
SC-1
BLANK
FLATCH1
BA0
BA1
FLATCH2
BD[0..11]
OPTION2
FD[0..11]
CA[0..4]
P2
SLAVE
24PIN
P1
SLAVE
20PIN
OPTIONAL
U39C
U39D
74HC32
RP11
1K
RP9
10K
U35
U33
U32
U46
74HC574
74HC174
U48
U47
EPROM
CG 1
CG 2
REFU48
REFU47
32PIN
SOCKET
U69
U62
U56
U57
U45
U44
74HC257
74AC257
74AC32
960VID01
U77C
C74
0.1UF
C78
10UF
L2
FERRITE_BEAD
CR11
CR12
CR13
CR14
CR15
CR16
1N4148
R63
R64
R65
75
R75
10K
U70
G176
RED
GREEN
BLUE
V_GND (J1-23A)
DOTCLK
BLACK
E13
ETCH
C86
1UF
C85
0.1UF
Q4
LM334
R62
15
1%
R61
150
CR4
1N4148
C88
22UF
C48
C47
C45
C44
C68
C67
C36
C37
0.1UF
VCC
VSS

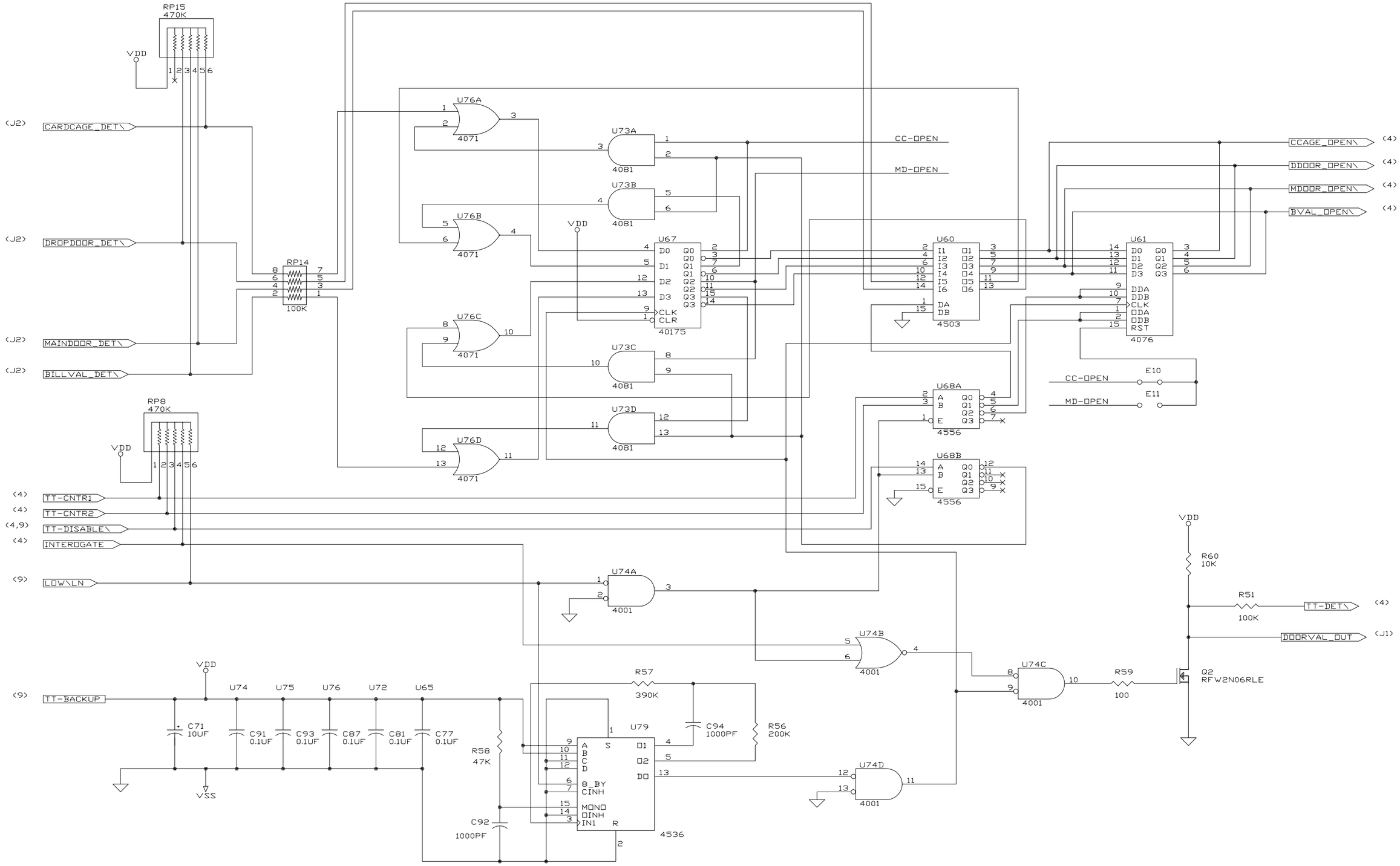
RP15
470K
VDD
(J2) CARDCAGE_DET\
(J2) DROPDOOR_DET\
(J2) MAINDOOR_DET\
(J2) BILLVAL_DET\
RP14
100K
RP8
470K
(4) TT-CNTR1
(4) TT-CNTR2
(4,9) TT-DISABLE\
(4) INTEROGATE
(9) LOW\LN
(9) TT-BACKUP
U76A
U76B
U76C
U76D
4071
U73A
U73B
U73C
U73D
4081
U67
40175
U60
4503
U61
4076
U68A
U68B
4556
CC-OPEN
MD-OPEN
E10
E11
CCAGE_OPEN\ (4)
DDOOR_OPEN\ (4)
MDOOR_OPEN\ (4)
BVAL_OPEN\ (4)
U74A
U74B
U74C
U74D
4001
R60
10K
R51
100K
TT-DET\ (4)
DOORVAL_OUT (J1)
R59
100
Q2
RFW2N06RLE
U74 U75 U76 U72 U65
C71 10UF
C91 0.1UF
C93 0.1UF
C87 0.1UF
C81 0.1UF
C77 0.1UF
VSS
R57
390K
R58
47K
C92
1000PF
C94
1000PF
R56
200K
U79
4536

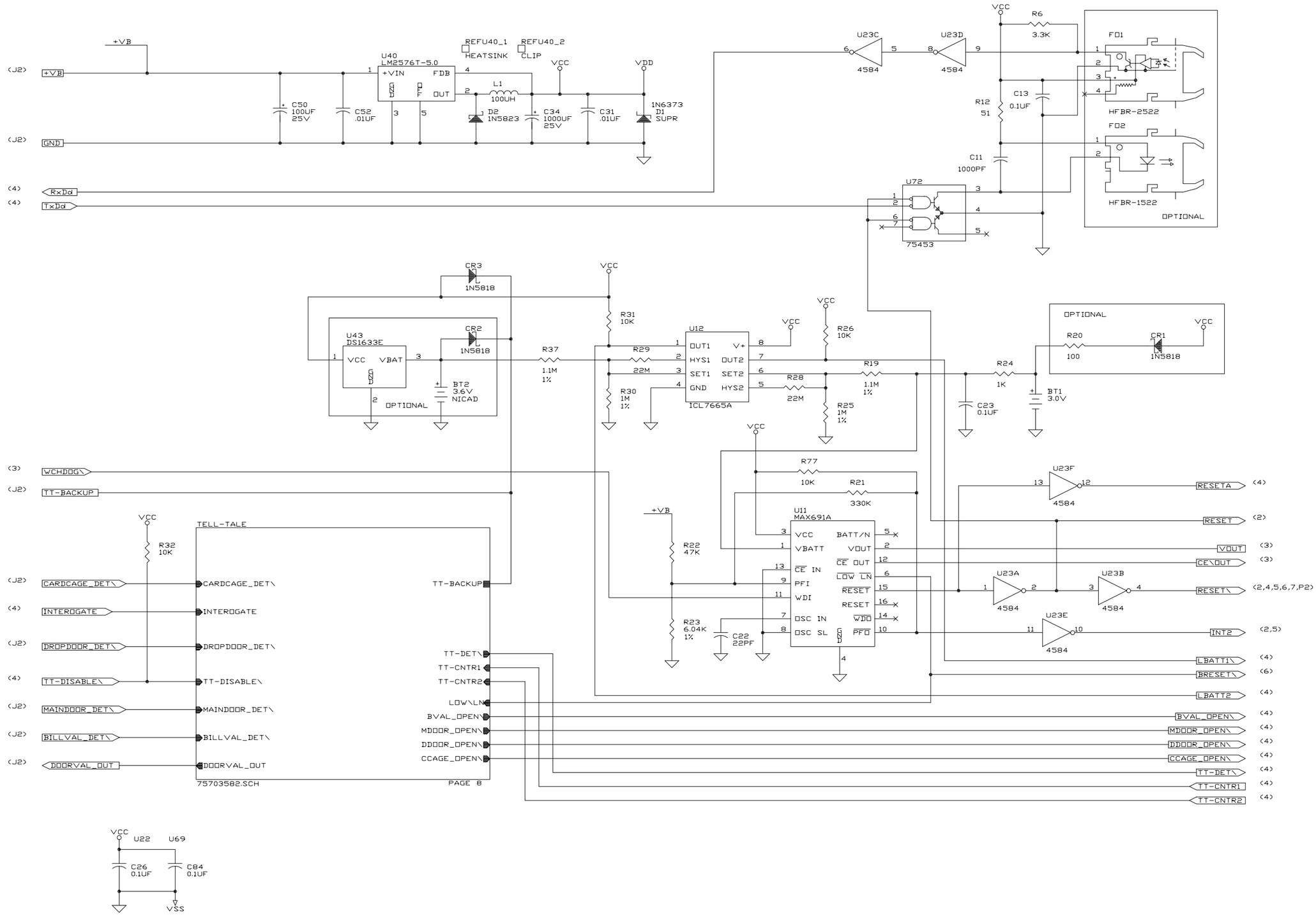
+VB
U40
LM2576T-5.0
+VIN
FDB
ON/OFF
OUT
GND
REFU40_1
HEATSINK
REFU40_2
CLIP
VCC
VDD
L1
100UH
C50
100UF
25V
C52
.01UF
D2
1N5823
C34
1000UF
25V
C31
.01UF
1N6373
D1
SUPR
U23C
4584
U23D
4584
R6
3.3K
FO1
HFBR-2522
FO2
HFBR-1522
OPTIONAL
R12
51
C13
0.1UF
C11
1000PF
U72
75453
RxDo
TxDo
CR3
1N5818
CR2
1N5818
U43
DS1633E
VCC
VBAT
BT2
3.6V
NICAD
OPTIONAL
R37
1.1M
1%
R31
10K
R29
22M
R30
1M
1%
U12
OUT1
HYS1
SET1
GND
V+
OUT2
SET2
HYS2
ICL7665A
R26
10K
R28
22M
R19
1.1M
1%
R25
1M
1%
R24
1K
C23
0.1UF
BT1
3.0V
OPTIONAL
R20
100
CR1
1N5818
WCHDOG\
TT-BACKUP
R77
10K
R21
330K
U11
MAX691A
VCC
VBATT
CE IN
PFI
WDI
OSC IN
OSC SL
BATT/N
VOUT
CE OUT
LOW LN
RESET
RESET
WDO
PFO
GND
R22
47K
R23
6.04K
1%
C22
22PF
U23F
4584
RESETA
RESET
VOUT
CE\OUT
U23A
4584
U23B
4584
RESET\
U23E
4584
INT2
LBATT1\
BRESET\
LBATT2
BVAL_OPEN\
MDOOR_OPEN\
DDOOR_OPEN\
CCAGE_OPEN\
TT-DET\
TT-CNTR1
TT-CNTR2
R32
10K
TELL-TALE
CARDCAGE_DET\
INTEROGATE
DROPDOOR_DET\
TT-DISABLE\
MAINDOOR_DET\
BILLVAL_DET\
DOORVAL_OUT
TT-BACKUP
TT-DET\
TT-CNTR1
TT-CNTR2
LOW\LN
BVAL_OPEN\
MDOOR_OPEN\
DDOOR_OPEN\
CCAGE_OPEN\
75703582.SCH
PAGE 8
U22
U69
C26
0.1UF
C84
0.1UF
VSS