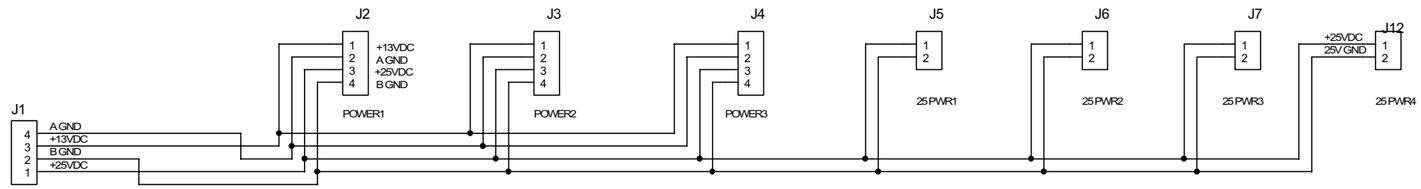
J1
4 A GND
3 +13VDC
2 B GND
1 +25VDC
J2
1 +13VDC
2 A GND
3 +25VDC
4 B GND
POWER1
J3
POWER2
J4
POWER3
J5
25 PWR1
J6
25 PWR2
J7
25 PWR3
J12
+25VDC
25V GND
25 PWR4

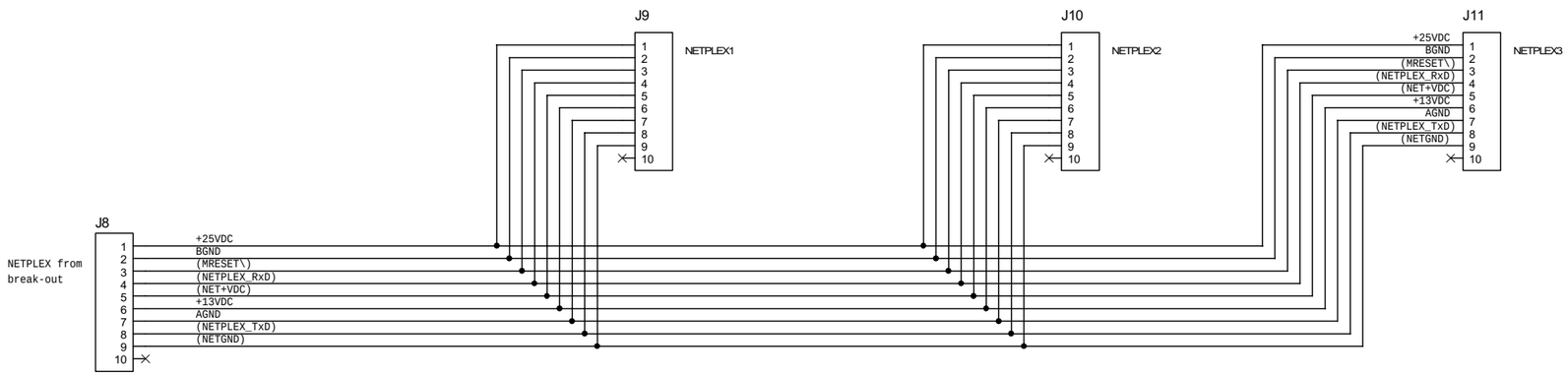
J8
NETPLEX from break-out
1 +25VDC
2 BGND
3 (MRESET\)
4 (NETPLEX_RxD)
5 (NET+VDC)
6 +13VDC
7 AGND
8 (NETPLEX_TxD)
9 (NETGND)
10
J9
NETPLEX1
J10
NETPLEX2
J11
NETPLEX3