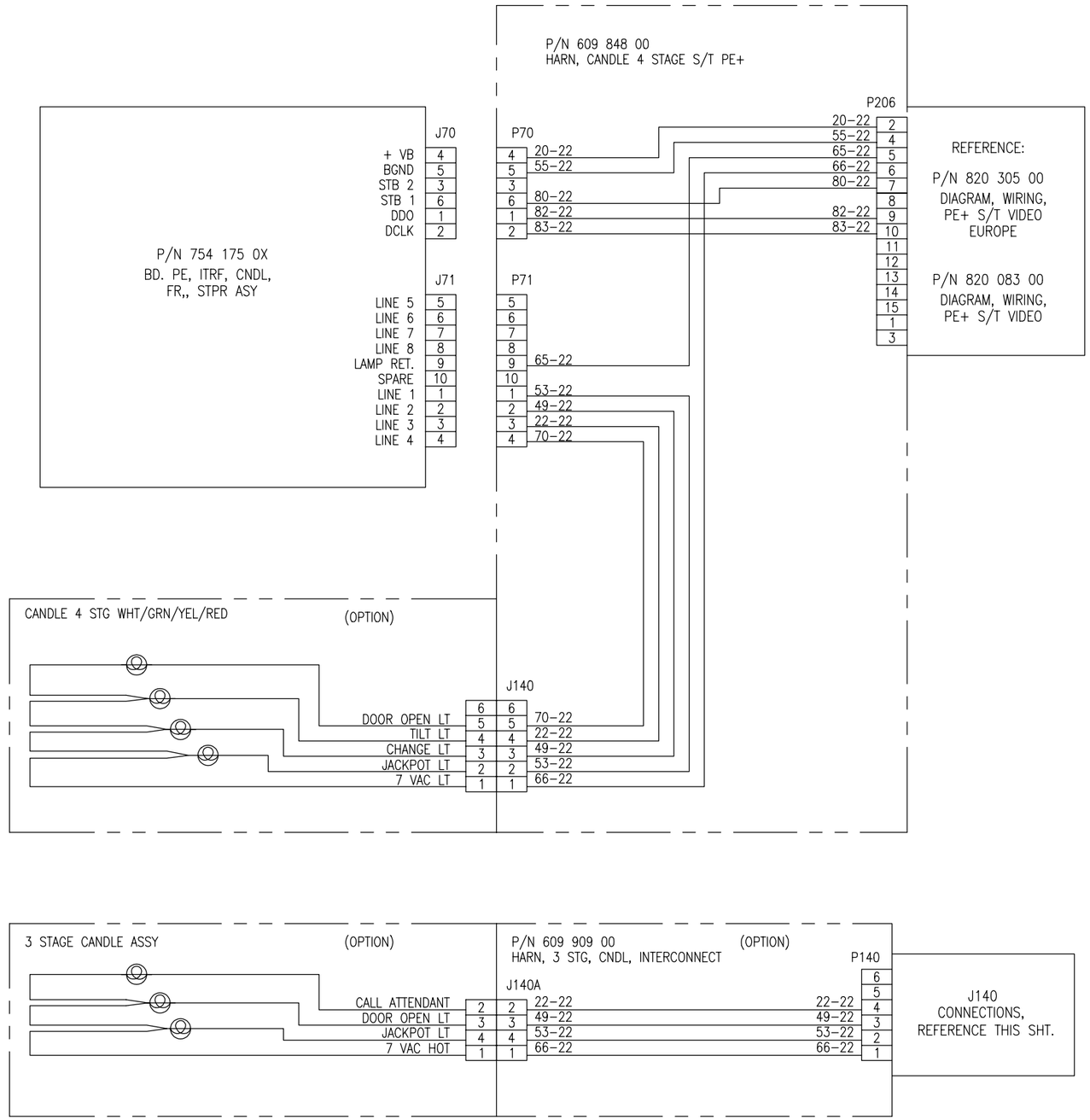
P/N 609 848 00
HARN, CANDLE 4 STAGE S/T PE+
P/N 754 175 0X
BD. PE, ITRF, CNDL,
FR,, STPR ASY
J70
+ VB 4
BGND 5
STB 2 3
STB 1 6
DDO 1
DCLK 2
J71
LINE 5 5
LINE 6 6
LINE 7 7
LINE 8 8
LAMP RET. 9
SPARE 10
LINE 1 1
LINE 2 2
LINE 3 3
LINE 4 4
P70
P71
20-22
55-22
80-22
82-22
83-22
65-22
53-22
49-22
22-22
70-22
P206
REFERENCE:
P/N 820 305 00
DIAGRAM, WIRING,
PE+ S/T VIDEO
EUROPE
P/N 820 083 00
DIAGRAM, WIRING,
PE+ S/T VIDEO
CANDLE 4 STG WHT/GRN/YEL/RED
(OPTION)
J140
DOOR OPEN LT
TILT LT
CHANGE LT
JACKPOT LT
7 VAC LT
66-22
3 STAGE CANDLE ASSY
(OPTION)
P/N 609 909 00
HARN, 3 STG, CNDL, INTERCONNECT
(OPTION)
P140
J140A
CALL ATTENDANT
DOOR OPEN LT
JACKPOT LT
7 VAC HOT
J140
CONNECTIONS,
REFERENCE THIS SHT.