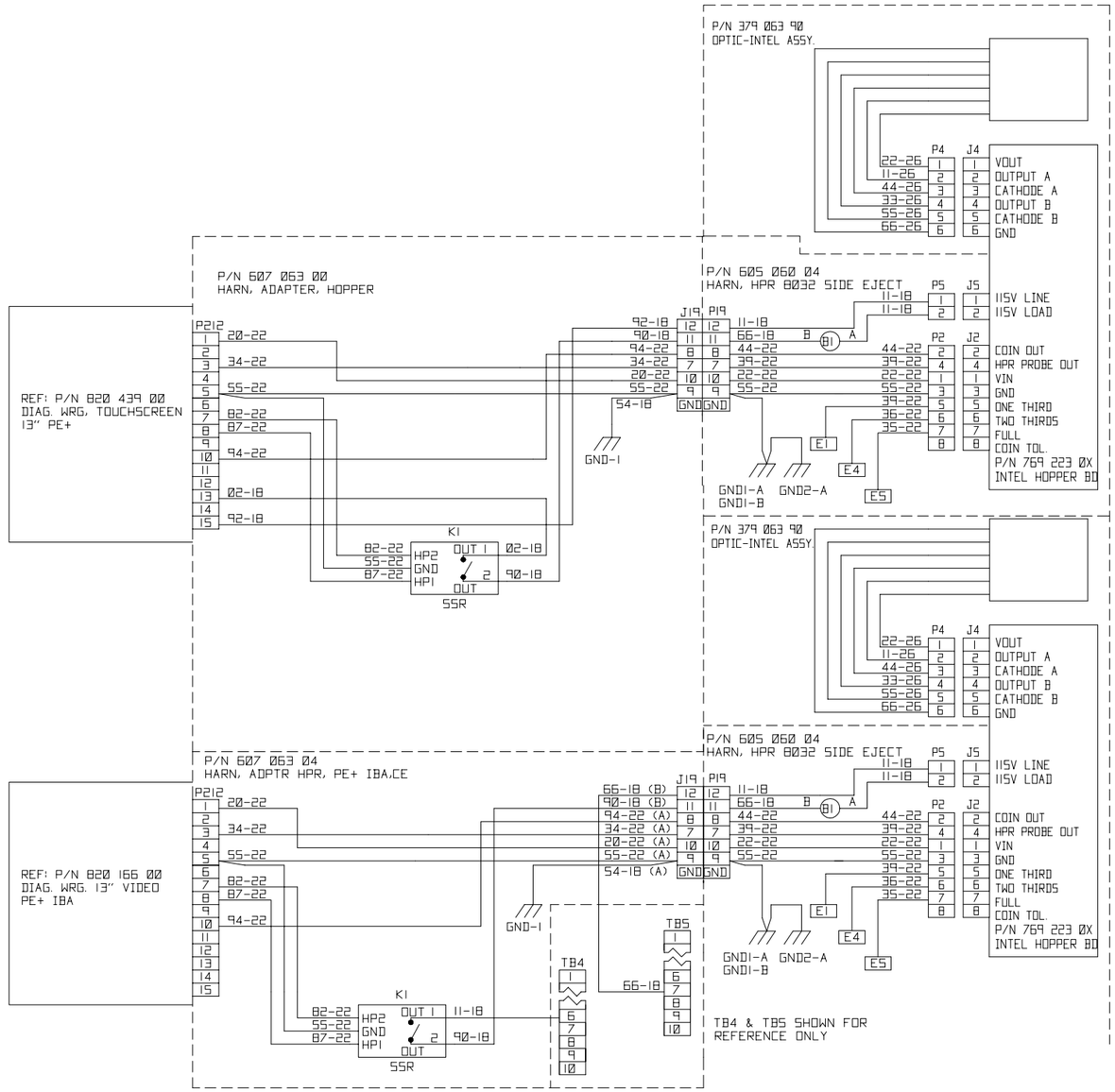
P/N 379 063 90
OPTIC-INTEL ASSY.
P4
J4
22-26
11-26
44-26
33-26
55-26
66-26
VOUT
OUTPUT A
CATHODE A
OUTPUT B
CATHODE B
GND
P/N 605 060 04
HARN, HPR 8032 SIDE EJECT
P5
J5
11-18
11-18
115V LINE
115V LOAD
P2
J2
44-22
39-22
22-22
55-22
36-22
35-22
COIN OUT
HPR PROBE OUT
VIN
GND
ONE THIRD
TWO THIRDS
FULL
COIN TOL.
P/N 769 223 0X
INTEL HOPPER BD
E1
E4
E5
GND1-A
GND1-B
GND2-A
P/N 607 063 00
HARN, ADAPTER, HOPPER
REF: P/N 820 439 00
DIAG. WRG, TOUCHSCREEN
13" PE+
P212
20-22
34-22
55-22
82-22
87-22
94-22
02-18
92-18
J19
P19
92-18
90-18
94-22
34-22
20-22
55-22
54-18
GND
GND-1
K1
HP2
GND
HP1
OUT 1
OUT
SSR
P/N 607 063 04
HARN, ADPTR HPR, PE+ IBA,CE
REF: P/N 820 166 00
DIAG. WRG. 13" VIDEO
PE+ IBA
66-18 (B)
90-18 (B)
94-22 (A)
34-22 (A)
20-22 (A)
55-22 (A)
54-18 (A)
TB4
TB5
66-18
TB4 & TB5 SHOWN FOR
REFERENCE ONLY

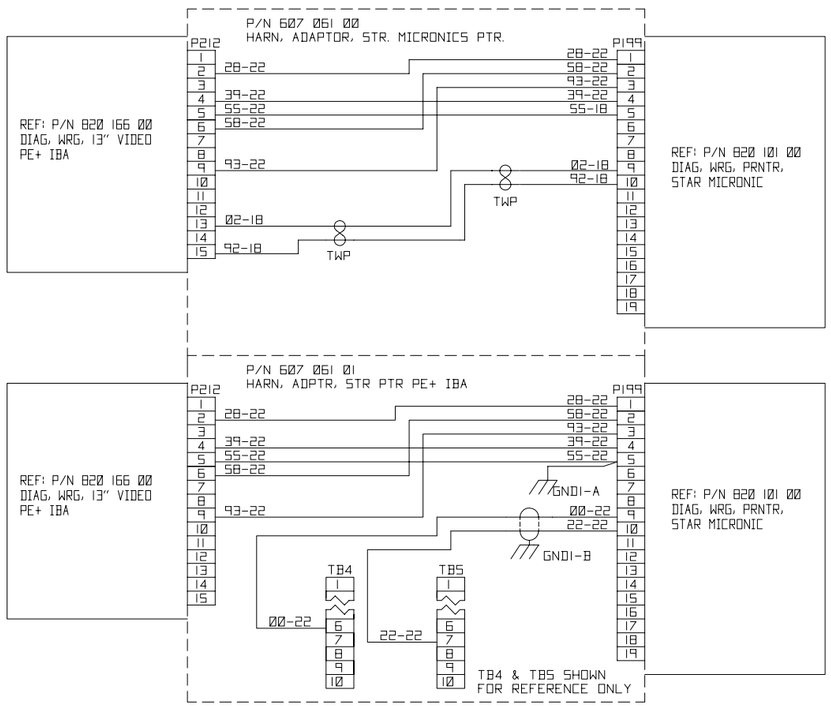
P/N 607 061 00
HARN, ADAPTOR, STR. MICRONICS PTR.
P212
P199
REF: P/N 820 166 00
DIAG, WRG, 13" VIDEO
PE+ IBA
REF: P/N 820 101 00
DIAG, WRG, PRNTR,
STAR MICRONIC
28-22
39-22
55-22
58-22
93-22
02-18
92-18
TWP
P/N 607 061 01
HARN, ADPTR, STR PTR PE+ IBA
GND1-A
00-22
22-22
GND1-B
TB4
TB5
TB4 & TB5 SHOWN
FOR REFERENCE ONLY

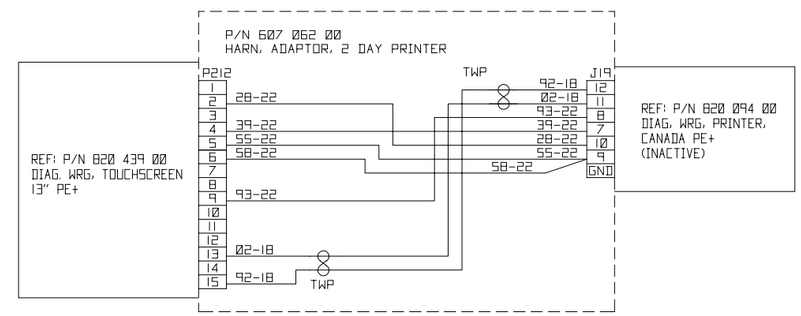
P/N 607 062 00
HARN, ADAPTOR, 2 DAY PRINTER
P212
J19
TWP
REF: P/N 820 439 00
DIAG. WRG, TOUCHSCREEN
13" PE+
REF: P/N 820 094 00
DIAG, WRG, PRINTER,
CANADA PE+
(INACTIVE)
28-22
39-22
55-22
58-22
93-22
02-18
92-18
GND