NOTES: UNLESS OTHERWISE SPECIFIED.
1. ALL RESISTANCE IS IN OHMS, 1/4 WATT, 5% AND ALL CAPACITANCE IS IN MICROFARADS.
2. BLANK PINS ON CONNECTORS J64-J67 ARE 2, 17, 19 & 20.

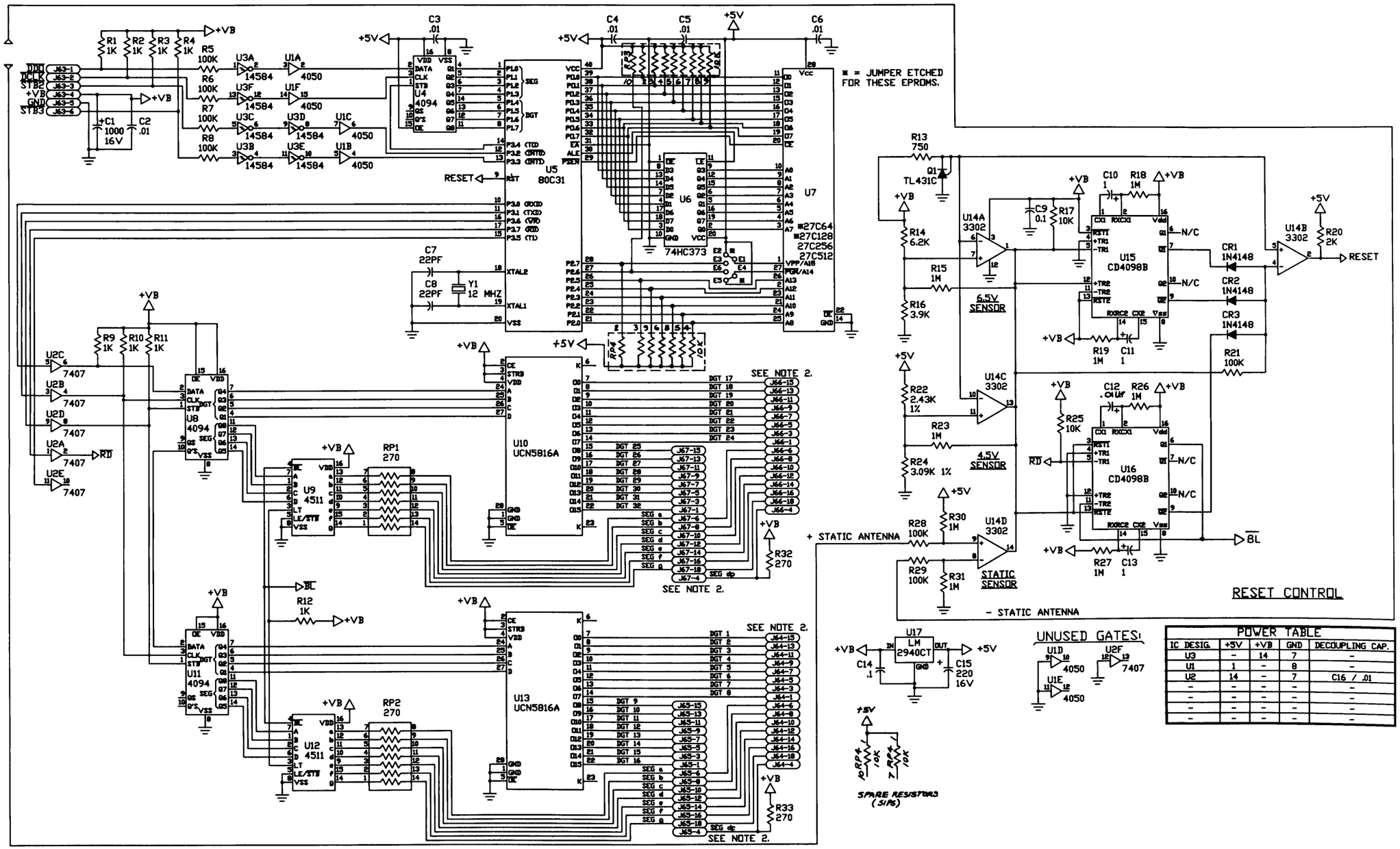

POWER TABLE				
IC DESIG.	+5V	+VB	GND	DECOUPLING CAP.
U3	-	14	7	-
U1	1	-	8	-
U2	14	-	7	C16 / .01
-	-	-	-	-
-	-	-	-	-
-	-	-	-	-
-	-	-	-	-