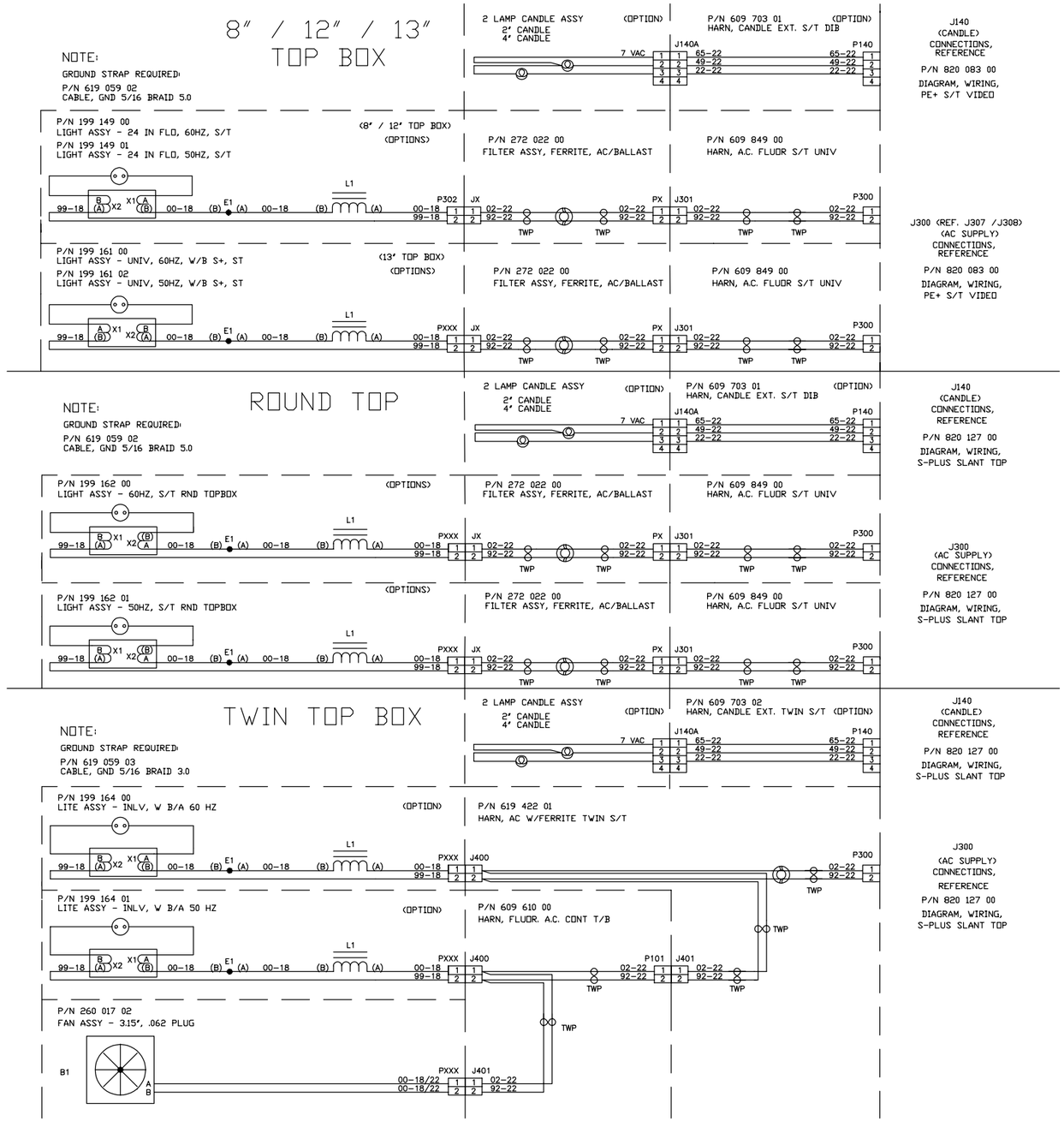
8" / 12" / 13"
TOP BOX
NOTE:
GROUND STRAP REQUIRED
P/N 619 059 02
CABLE, GND 5/16 BRAID 5.0
2 LAMP CANDLE ASSY
2' CANDLE
4' CANDLE
(OPTION)
P/N 609 703 01
HARN, CANDLE EXT. S/T DIB
(OPTION)
J140
(CANDLE)
CONNECTIONS,
REFERENCE
P/N 820 083 00
DIAGRAM, WIRING,
PE+ S/T VIDEO
P/N 199 149 00
LIGHT ASSY - 24 IN FLO, 60HZ, S/T
P/N 199 149 01
LIGHT ASSY - 24 IN FLO, 50HZ, S/T
(8' / 12' TOP BOX)
(OPTIONS)
P/N 272 022 00
FILTER ASSY, FERRITE, AC/BALLAST
P/N 609 849 00
HARN, A.C. FLUOR S/T UNIV
J300 (REF. J307 /J308)
(AC SUPPLY)
CONNECTIONS,
REFERENCE
P/N 820 083 00
DIAGRAM, WIRING,
PE+ S/T VIDEO
P/N 199 161 00
LIGHT ASSY - UNIV, 60HZ, W/B S+, ST
P/N 199 161 02
LIGHT ASSY - UNIV, 50HZ, W/B S+, ST
(13' TOP BOX)
(OPTIONS)
P/N 272 022 00
FILTER ASSY, FERRITE, AC/BALLAST
P/N 609 849 00
HARN, A.C. FLUOR S/T UNIV
ROUND TOP
NOTE:
GROUND STRAP REQUIRED
P/N 619 059 02
CABLE, GND 5/16 BRAID 5.0
2 LAMP CANDLE ASSY
2' CANDLE
4' CANDLE
(OPTION)
P/N 609 703 01
HARN, CANDLE EXT. S/T DIB
(OPTION)
J140
(CANDLE)
CONNECTIONS,
REFERENCE
P/N 820 127 00
DIAGRAM, WIRING,
S-PLUS SLANT TOP
P/N 199 162 00
LIGHT ASSY - 60HZ, S/T RND TOPBOX
(OPTIONS)
P/N 272 022 00
FILTER ASSY, FERRITE, AC/BALLAST
P/N 609 849 00
HARN, A.C. FLUOR S/T UNIV
J300
(AC SUPPLY)
CONNECTIONS,
REFERENCE
P/N 820 127 00
DIAGRAM, WIRING,
S-PLUS SLANT TOP
P/N 199 162 01
LIGHT ASSY - 50HZ, S/T RND TOPBOX
(OPTIONS)
P/N 272 022 00
FILTER ASSY, FERRITE, AC/BALLAST
P/N 609 849 00
HARN, A.C. FLUOR S/T UNIV
TWIN TOP BOX
NOTE:
GROUND STRAP REQUIRED
P/N 619 059 03
CABLE, GND 5/16 BRAID 3.0
2 LAMP CANDLE ASSY
2' CANDLE
4' CANDLE
(OPTION)
P/N 609 703 02
HARN, CANDLE EXT. TWIN S/T
(OPTION)
J140
(CANDLE)
CONNECTIONS,
REFERENCE
P/N 820 127 00
DIAGRAM, WIRING,
S-PLUS SLANT TOP
P/N 199 164 00
LITE ASSY - INLV, W B/A 60 HZ
(OPTION)
P/N 619 422 01
HARN, AC W/FERRITE TWIN S/T
J300
(AC SUPPLY)
CONNECTIONS,
REFERENCE
P/N 820 127 00
DIAGRAM, WIRING,
S-PLUS SLANT TOP
P/N 199 164 01
LITE ASSY - INLV, W B/A 50 HZ
(OPTION)
P/N 609 610 00
HARN, FLUOR. A.C. CONT T/B
P/N 260 017 02
FAN ASSY - 3.15", .062 PLUG
B1
7 VAC
99-18
00-18
02-22
92-22
65-22
49-22
22-22
00-18/22
TWP
L1
E1
J140A
P140
P302
JX
PX
J301
P300
PXXX
J400
P101
J401