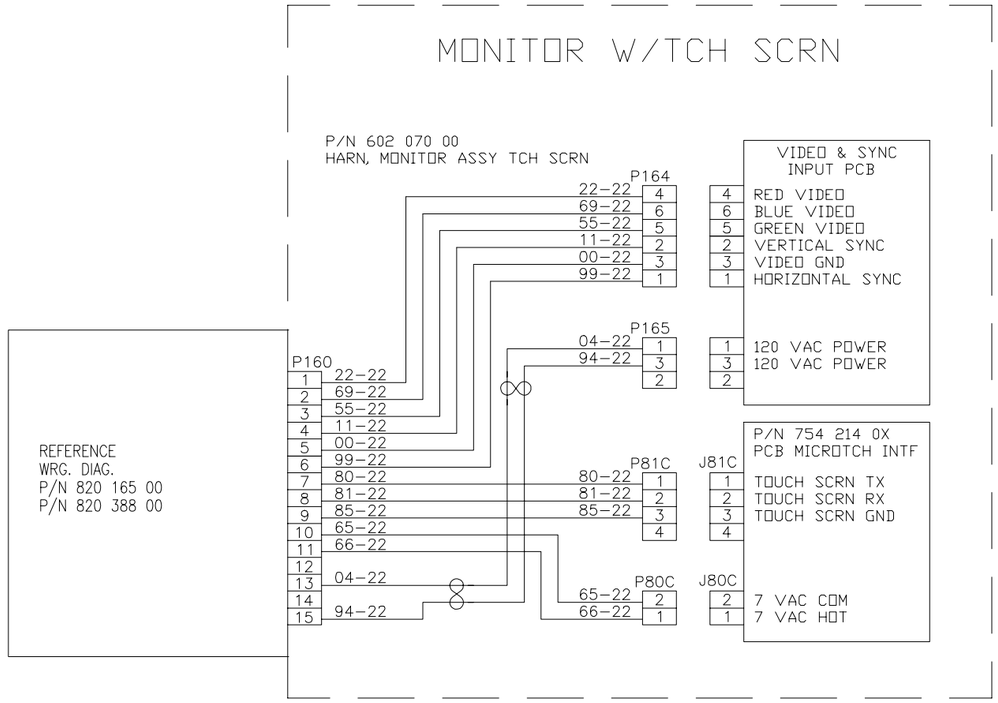
MONITOR W/TCH SCRN
P/N 602 070 00
HARN, MONITOR ASSY TCH SCRN
REFERENCE
WRG. DIAG.
P/N 820 165 00
P/N 820 388 00
P160
P164
P165
P81C
P80C
J81C
J80C
VIDEO & SYNC
INPUT PCB
RED VIDEO
BLUE VIDEO
GREEN VIDEO
VERTICAL SYNC
VIDEO GND
HORIZONTAL SYNC
120 VAC POWER
120 VAC POWER
P/N 754 214 0X
PCB MICROTCH INTF
TOUCH SCRN TX
TOUCH SCRN RX
TOUCH SCRN GND
7 VAC COM
7 VAC HOT

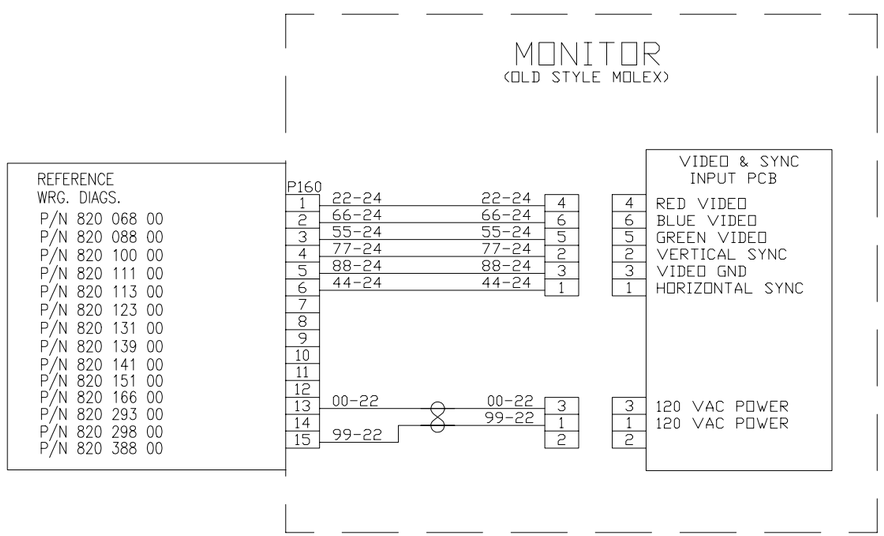
MONITOR
(OLD STYLE MOLEX)
REFERENCE
WRG. DIAGS.
P/N 820 068 00
P/N 820 088 00
P/N 820 100 00
P/N 820 111 00
P/N 820 113 00
P/N 820 123 00
P/N 820 131 00
P/N 820 139 00
P/N 820 141 00
P/N 820 151 00
P/N 820 166 00
P/N 820 293 00
P/N 820 298 00
P/N 820 388 00
P160
VIDEO & SYNC
INPUT PCB
RED VIDEO
BLUE VIDEO
GREEN VIDEO
VERTICAL SYNC
VIDEO GND
HORIZONTAL SYNC
120 VAC POWER
120 VAC POWER

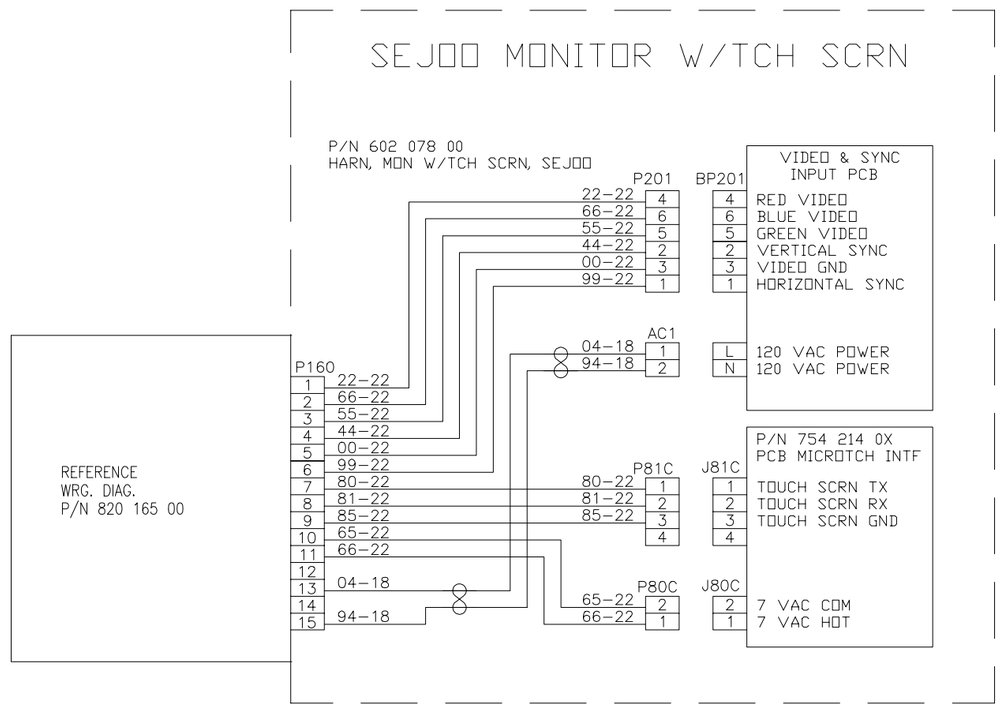
SEJOO MONITOR W/TCH SCRN
P/N 602 078 00
HARN, MON W/TCH SCRN, SEJOO
REFERENCE
WRG. DIAG.
P/N 820 165 00
P160
P201
BP201
AC1
P81C
P80C
J81C
J80C
VIDEO & SYNC
INPUT PCB
RED VIDEO
BLUE VIDEO
GREEN VIDEO
VERTICAL SYNC
VIDEO GND
HORIZONTAL SYNC
120 VAC POWER
120 VAC POWER
P/N 754 214 0X
PCB MICROTCH INTF
TOUCH SCRN TX
TOUCH SCRN RX
TOUCH SCRN GND
7 VAC COM
7 VAC HOT